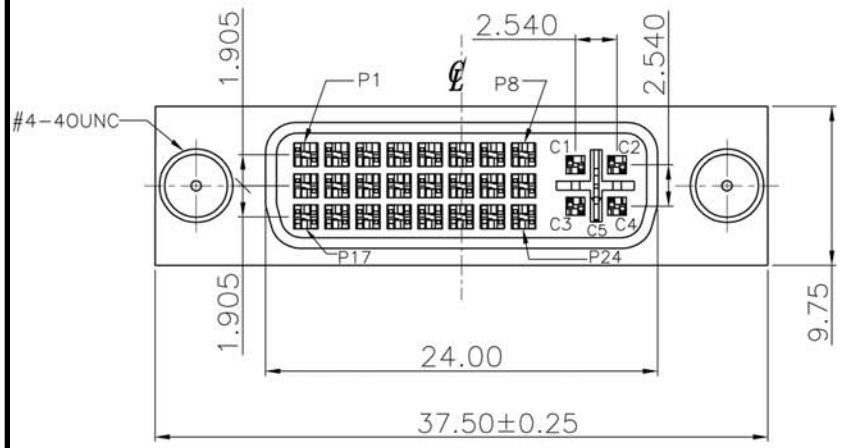

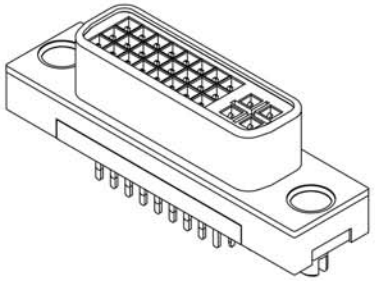

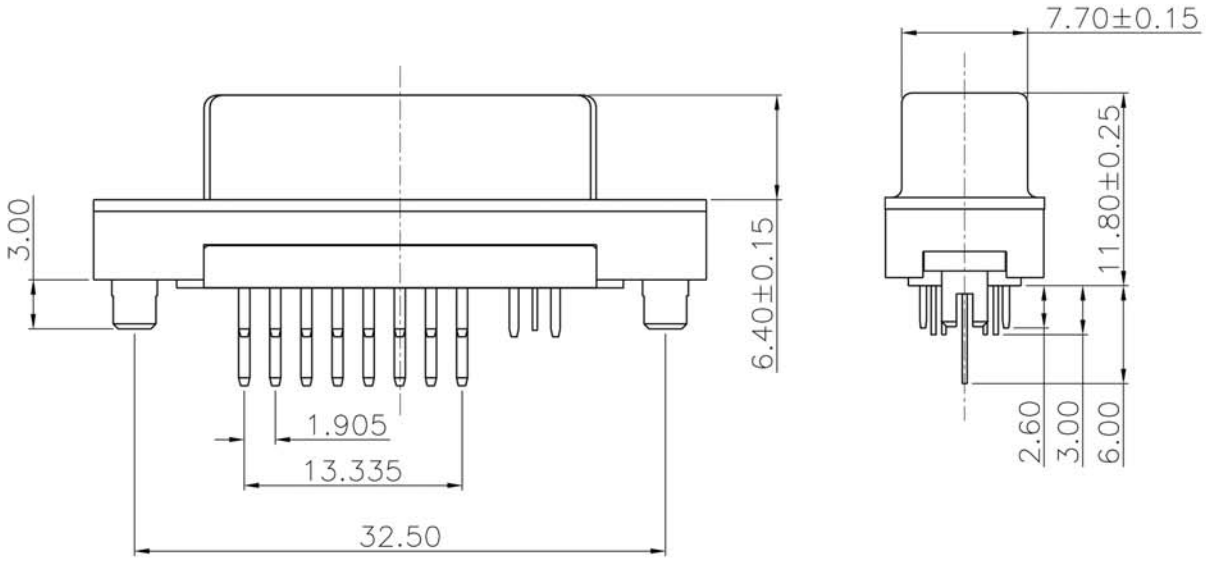

Materials:

- Body & Latch: NY66 Rated
- Contacts: Phosphor Bronze
- Ground Contact: Brass
- Shell: Zinc Alloy
- Rivet: Brass
- Contact Plating: Gold Plating over Nickel

Electrical:

- Rating Current: 1.5 Amp
- Rating Voltage: 40V
- Contact Resistance: 30MΩ Max.
- Insulation Resistance: 1,000MΩ Min. 500V DC
- Dielectric Withstanding: 500V AC
- Operating Temperature: -20°C ~ +80°C

⊛ = Assmann Logo

RoHS Compliant

ITEM NO

A-DVI-1009-1-01-R

TITLE

DVI Female 24+5 Solder Type, White, No Nut

ASSMANN Electronics, Inc.
1840 W. Drake Drive, Suite 101 - Tempe, AZ 85283
Toll Free: 1-877-277-6266 Email: info@usa-assmann.com

THIS DRAWING IS UNPUBLISHED
©Copyright 2009 by Assmann Electronic Components
All International Rights Reserved